YASKAWA

Collaborative Robot

Collaborative Robot HC10DT

GOOD DESIGN AWARD 2017

＊For MOTOMAN-HC10

Certified for ISO9001 and ISO14001

JAB QMS Accreditation R009

JQA-0813

JQA-EM0202

Is it possible for us to integrate robots into our factory?

The MOTOMAN-HC10DT has the answers to the challenges you are facing in integrating robots into your factory.

Challenge 1 Insufficient space to set up a robot and a safety fence

Q How can we install robots if there is not enough space?

A The HC10DT can be used without a safety fence because it is equipped with optimal safety functions. This makes the installation process easier and eliminates the need to secure large spaces, such as those used for conventional industrial robots.

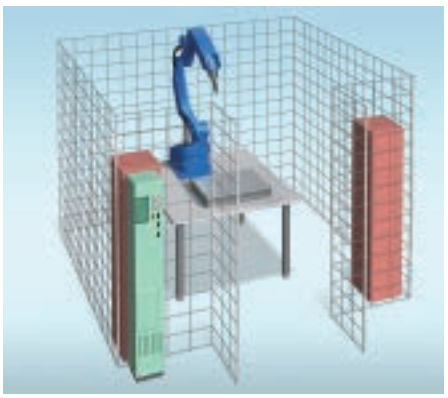

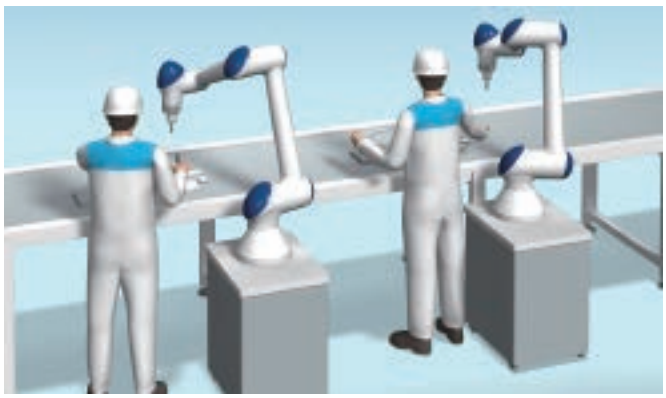

Note: The HC10DT can be used without a safety fence because it is equipped with optimal safety functions. However, a risk assessment should be conducted each time a system is constructed.

Challenge 2 Difficulty in changing layouts once the robot is installed

Q Safety fences and other equipment have to be moved when changing the position of an industrial robot that has already been installed. Can this process be simplified?

A The HC10DT can be easily transported since it can be used without a safety fence. This allows for more flexible changes to layouts according to your production plans.

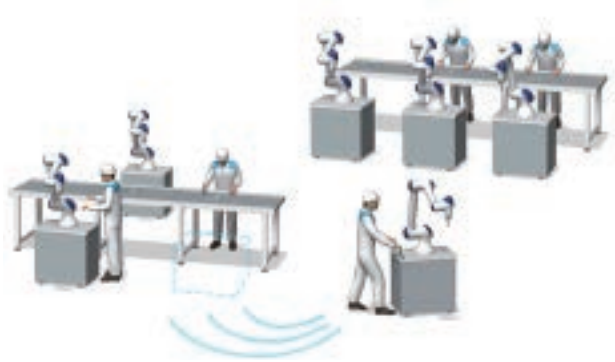

Note: The HC10DT can be used without a safety fence because it is equipped with optimal safety functions. However, a risk assessment should be conducted each time a system is constructed.

Challenge 3 Safety of workers performing operations near robots

Q Can the safety of workers be guaranteed when they work close to robots?

A The essential safety design of the HC10DT prevents a worker's fingers and hands from being caught in the robot arm and enables safe operation. The PFL function* allows the HC10DT to stop automatically when it detects a force that exceeds preset limits and minimizes any damage that may be caused by contact between humans and robots.

* PFL function: Power and Force Limiting function
The HC10DT complies with the global standard ISO10218-1 (JISB8433-1 for Japan Industrial Standard). The safety function of the HC10DT robot controller complies with the global standard ISO13849-1PLd (Cat.3).

Note: The HC10DT can be used without a safety fence because it is equipped with optimal safety functions. However, a risk assessment should be conducted each time a system is constructed.

Challenge 4 Difficulty teaching because workers are unfamiliar with robot operations

Q Can people who are not familiar with industrial robots or have no specialist knowledge carry out the complicated process of teaching robots?

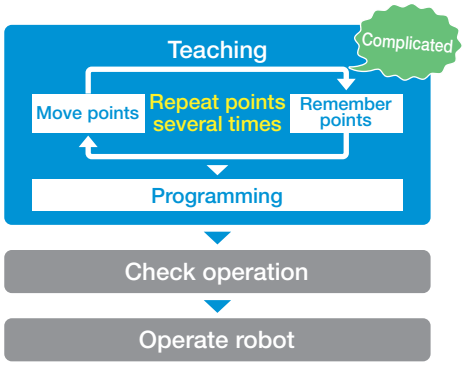

A Conventional teaching has been set up through a complicated process using a programming pendant. With the HC10DT, even workers who are unfamiliar with robots can intuitively teach positions for robots using the easy teaching function and direct teach button.

Features of MOTOMAN-HC10DT

Safe operation and safe design

Safe design reduces possibility of fingers and hands being caught

The number of protrusions on the surface has been reduced by changes in the design to a smoother shape with fewer angles.

Space is secured between the robot arms, which reduces risk of fingers and hands from being caught.

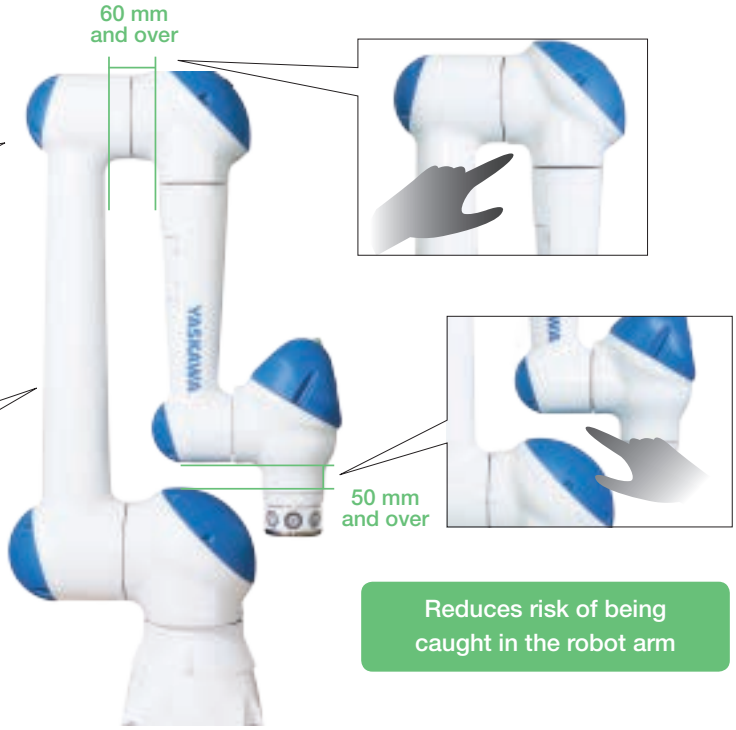

Reduces risk of being caught in the robot arm

Optional

Protective soft cover to reduce impacts from contact or collisions

- Cover surface of the robot arm with soft cover
- Reduces shock if the robot arm and worker come into contact

Reduces contact/ collision impact

Safety technology for collaborative work

- PFL (Power and Force Limiting) function
  The PFL function suspends the robot when it detects an external force in collaborative mode. The robot will stop when it detects an external force exceeding the preset limit value, such as when there is contact or a collision between the robot and a worker or the robot and an obstacle.
  Note: This function complies with the global standard ISO13849-1PLd (Cat.3) certified by a third party certification body.
- Avoidance function
  The avoidance function releases the robot in the opposite direction of the external force before the PFL function stops the robot. Profiling control is available by pushing or pulling the robot.
- Easy teaching function
  The easy teaching function allows workers to directly push and pull the robot when teaching. This allows even workers unfamiliar with robots to easily operate the HC10DT.

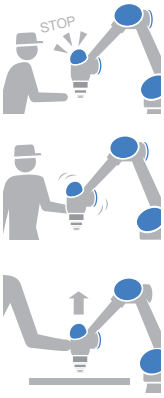

Switch to enable/disable the collaborative operation

- When collaborative operation is enabled, the HC10DT operates at safe speeds to ensure the safety of workers.
- When collaborative operation is disabled, the HC10DT operates at the same high speed as ordinary robots, which increases production efficiency.
- Both production efficiency and safety of workers can be improved by switching between enabling or disabling the collaborative operation.

When workers are in the vicinity

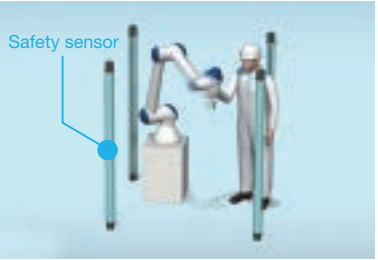

The HC10DT operates in collaborative mode at safe speeds to ensure the safety of workers.

When workers are not in the vicinity

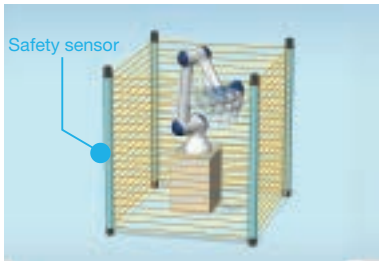

The HC10DT operates in normal mode at the same high speed as other industrial robots to improve productivity.

In order to enable collaborative work between robots and humans, risks should be assessed throughout the entire robotic system in consideration of human safety to reduce the possibility of injury or damage towards humans or by applying ISO measures for industrial robot standards (ISO 10218-1: 2011 and ISO 10218-2: 2011).

Easy operations even for people unfamiliar with robots

- The easy teaching function of the HC10DT can be used to intuitively teach the position for the robot. The use of the direct teach button improves the operational capability of workers since it eliminates the need to hold a programming pendant while teaching the robot.
- The easy teaching function makes it easy to teach positions for robots even for people who are not familiar with robots.

Direct teach button

Teach positions for robots by pressing the buttons on the direct teach button.

Set up on dedicated page

Teaching with the direct teach button

Intuitive operation has been improved since the robot's arms can be moved with both hands.

Applications

Note: The HC10DT can be used without a safety fence because it is equipped with optimal safety functions. However, a risk assessment should be conducted each time a system is constructed.

Machine tending and interbay transfer

The HC10DT can be used to transfer parts in working areas and equipment in the same space as workers without using a safety fence. Workers only need to install the HC10DT where necessary according to production plans, check that the HC10DT is operating normally, and check the quality of processed parts.

In addition to reducing repetitive tasks by workers, the HC10DT can also be quickly set up on existing production lines since the HC10DT can operate without safety fences to achieve a highly flexible layout that can be integrated with your equipment.

Pick and place, packaging

The HC10DT can be used to perform tasks such as picking, placing, and packaging. Workers can install the HC10DT on lines where needed and check the operation status. When the HC10DT is used in combination with a vision sensor, the HC10DT can perform picking operations by detecting parts with different shapes.

The layout and the position of the HC10DT can be changed according to production status. The HC10DT can also relieve workers from repetitive work and correctly pick, place, and package parts to improve accuracy and quality.

Quality inspections and measurements

Quality inspections and measurements of parts can be performed side-by-side with workers when the HC10DT is used in combination with distance measurement sensors and vision sensors. Workers check the entire product line and the HC10DT inspects parts where precision is required to ensure consistent quality.

A compact layout can be constructed since the HC10DT can be operated without a safety fence. The HC10DT can reduce work and collaboration between the HC10DT and workers can improve production quality.

Assembly

The HC10DT can assemble products together with workers and help workers assemble parts, such as tightening and fitting screws, by transporting the required parts to workers. The HC10DT can operate even in limited spaces such as assembly lines.

In addition to reducing the workload of workers on site, the HC10DT can improve product quality since it not only improves work efficiency, but also helps workers assemble parts in the exact order.

GOOD DESIGN

＊Awarded to MOTOMAN-HC10

Dimensions

Units: mm

: P-point Maximum Envelope

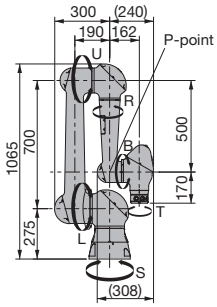

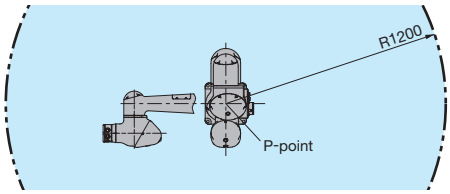

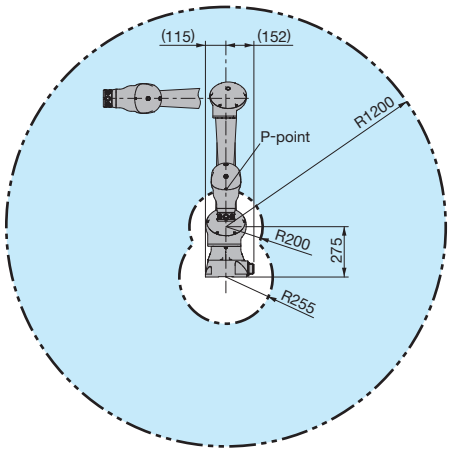

Manipulator Specifications

Specifications		MOTOMAN-HC10DT	MOTOMAN-HC10
Type		YR-1-06VXHC10-A10	YR-1-06VXHC10-A00
Direct teach button		Equipped	Not-equipped
Controlled Axis		6 (vertically articulated)	
Payload		10 kg	
Repeatability*1		±0.1 mm	
Range of Motion	S -axis (turning)	−180° - +180°	
	L -axis (lower arm)	−180° - +180°	
	U -axis (upper arm)*2	−5° - +355°	
	R -axis (roll)	−180° - +180°	
	B -axis (pitch/yaw)	−180° - +180°	
	T -axis (twist)	−180° - +180°	
Maximum Speed	S -axis (turning)	2.27 rad/s, 130°/s	
	L -axis (lower arm)	2.27 rad/s, 130°/s	
	U -axis (upper arm)	3.14 rad/s, 180°/s	
	R -axis (roll)	3.14 rad/s, 180°/s	
	B -axis (pitch/yaw)	4.36 rad/s, 250°/s	
	T -axis (twist)	4.36 rad/s, 250°/s	
Maximum Speed of the Tip	Collaborative operation enabled	250 mm/sec	
	Collaborative operation disabled	1000 mm/sec	
Allowable Moment	R -axis (roll)	27.4 N·m	
	B -axis (pitch/yaw)	27.4 N·m	
	T -axis (twist)	9.8 N·m	
Allowable Inertia (GD²/4)	R -axis (roll)	0.78 kg·m²	
	B -axis (pitch/yaw)	0.78 kg·m²	
	T -axis (twist)	0.10 kg·m²	
Approx. Robot Mass		48 kg	47 kg
Protected Structure		IP20	
Ambient Conditions	Temperature	0 ℃ to +40 ℃	
	Humidity	20% to 80%RH (non-condensing)	
	Vibration	4.9 m/s² (0.5G) or less	
	Altitude	1000 m or less	
	Others	Free from corrosive gas or liquid, or explosive gas or liquid Free from exposure to water, oil, or dust Free from excessive electrical noise (plasma) Free from strong magnetic fields	
Power Requirements*3		1.0 kVA	
Mounting		Floor, ceiling, wall, tilt	
Controller		YRC1000/YRC1000micro	YRC1000

＊1: Conforms to ISO 9283.
＊2: The range of motion of the U-axis itself. Not with respect to the ground.
＊3: Varies in accordance with applications and motion patterns.
Note: SI units are used for the specifications.

Controller for Small Robots

YRC1000micro

■Specifications

Items	Specifications
Configuration	Open structure (IP20)
Dimensions	425 (W)×315 (D)×180 (H) mm, 24L
Approx. Mass	16.5 kg (External axis amplifiers for up to two axes can be built in.)
Cooling System	Direct cooling
Ambient Temperature	During operation: 0℃ to +40℃, During storage: −10℃ to +60℃
Relative Humidity	90% max. (non-condensing)
Altitude	2000 m (with temperature derating) Derating condition of over 1000 m: max. ambient temperature decreases 1% per 100 m.
Power Supply	Single-phase 200/230 VAC (+10% to −15%), 50/60 Hz (±2%) Three-phase 200/220 VAC (+10% to −15%), 50/60 Hz (±2%)
Grounding	Grounding resistance : 100 Ω or less
Digital I/Os	Specialized signals: 7 inputs and 1 output General signals: 5 inputs and 7 outputs (7 transistor outputs) Expanded safety general signals: 6 inputs and 5 outputs (5 transistor outputs)
Positioning System	Serial communications (absolute encoder)
Programming Capacity	JOB: 200,000 steps, 10,000 instructions CIO ladder: 1,500 steps max.
Expansion Slots	PCI express: 2 slots
LAN (Connection to Host)	1 (10BASE-T/100BASE-TX)
Interface	Not possible
Control Method	Software servo control
Drive Units	SERVOPACK for AC servomotors

■Programming Pendant Specifications (Optional)*1

Items	Specifications
Dimensions	152 (W) × 53 (D) × 299 (H) mm
Approx. Mass	0.730 kg
Material	Reinforced plastics
Operation Device	Select keys, axis keys, numerical/application keys, mode selector switch with keys (mode: teach, play, and remote), emergency stop button, enable switch, compact flash card interface device (compact flash is optional.), USB port (USB2.0, 1 port)
Display	5.7-inch TFT color LCD, touch panel VGA 640 × 480 pixels (alphanumeric characters, Chinese characters, Japanese letters, and others)
IEC Protection Class	IP54
Cable Length	Standard: 8 m Max.: 20 m (with optional extension cable)

*1: A programming pendant or a dummy connector is required with the YRC1000micro. (Sold separately.)
Dummy connector: The dummy connector must be inserted when the programming pendant is not connected or when the software pendant is used.
The programming pendant for DX100, FS100, and DX200 controllers cannot be connected to the YRC1000micro controller because of differences in their specifications.
Note: Specifications are subject to change without notice.

GOOD DESIGN

Superlative Performance and Design

YRC1000

YRC1000 Robot Controller

Programming Pendant

■Specifications

Items		Specifications
Configuration		Dust proof IP54 (area of backside duct fan: IP2X)
Dimensions		598 (W)×427 (D)×490 (H) mm, 125 L
Approx. Mass		70 kg max. (External axis amplifiers for up to three axes can be built in.)
Cooling System		Indirect cooling
Ambient Temperature		During operation: 0°C to +45°C, During storage: −10°C to +60°C
Relative Humidity		90% max. (non-condensing)
Altitude		2000 m (with temperature derating) Derating condition of over 1000 m: max. ambient temperature decreases 1% per 100 m.
Power Supply		Japan: three-phase 200 VAC to 240 VAC (+10% to −15%), 50/60 Hz (±2%) Asia and Europe: three-phase 380 VAC to 440 VAC (+10% to −15%), 50/60 Hz (±2%) (neutral grounding) North America: three-phase 380 VAC to 480 VAC (+10% to −15%), 50/60 Hz (±2%) (neutral grounding)
Grounding		Grounding resistance: 100 Ω or less for 200-V class, 10 Ω or less for 400-V class
Digital I/Os	HC10DT	Specialized signals: 19 inputs and 6 outputs General signals: 32 inputs and 32 outputs (24 transistor outputs, 8 relay outputs) Expanded safety general signals: 8 inputs and 7 outputs (7 transistor outputs)
	HC10	Specialized signals: 19 inputs and 6 outputs General signals: 40 inputs and 40 outputs (32 transistor outputs, 8 relay outputs) Expanded safety general signals: 9 inputs and 8 outputs (8 transistor outputs)
Positioning System		Serial communications (absolute encoder)
Programming Capacity		JOB: 200,000 steps, 10,000 instructions CIO ladder: 20,000 steps max.
Expansion Slots		PCI express: 2 slots
LAN (Connection to Host)		2 (10BASE-T/100BASE-TX)
Interface		RS-232C: 1ch
Control Method		Software servo control
Drive Units		SERVOPACK for AC servomotors

■Programming Pendant Specifications

Items	Specifications
Dimensions	152 (W) × 53 (D) × 299 (H) mm
Approx. Mass	0.730 kg
Material	Reinforced plastics
Operation Device	Select keys, axis keys, numerical/application keys, mode selector switch with keys (mode: teach, play, and remote), emergency stop button, enable switch, compact flash card interface device (compact flash is optional.), USB port (USB 2.0, 1 port)
Display	5.7-inch TFT color LCD, touch panel VGA 640 × 480 pixels (alphanumeric characters, Chinese characters, Japanese letters, and others)
IEC Protection Class	IP54
Cable Length	Standard: 8 m Max.: 36 m (with optional extension cable)

3D Vision Package

MotoSight3D

Bin picking, which used to be impossible with robots, can be automated with the high-performance 3D vision package.

Range of detectable workpieces have increased — Works exceptionally well with metal workpieces

- Greasy parts with high reflection of light can be handled.
- Parts with curved surface or with complicated structure can be handled. ➡ **Optimal for pressed parts for automobile.**
- Target parts size (approx.)
  10×10 mm (when using RV300) to 1,000×1,000 mm (when using RV1100)

Highly accurate detection capability — Reduces the number of processes

- 3D position posture (6 degree-of-freedom) can be detected with one measurement.
- Temporary placing table or other positioning sensors are not needed.

Very simple setting operation — Reduces setup time

- Workpiece can be registered by inputting the CAD data and imaging the piled parts.

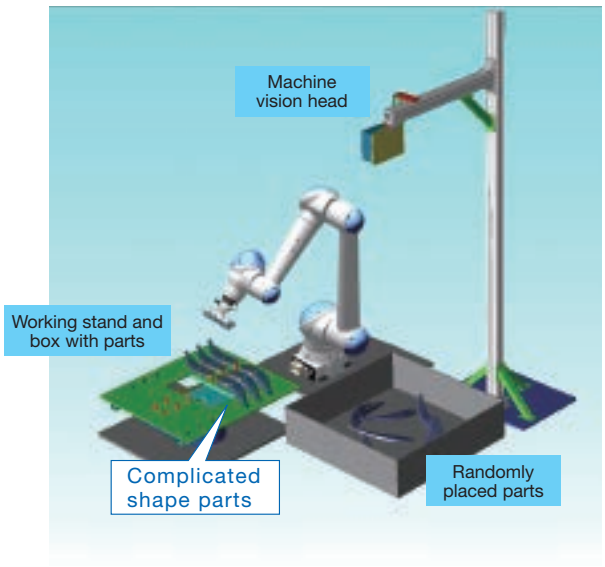

System Configuration

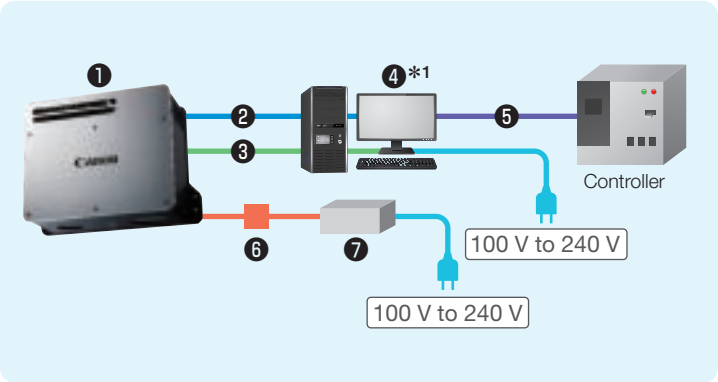

*1: Contact your Yaskawa representative for information on how to select a PC, when using a general PC or other PCs.

Device Composition Table

NO.	Name	Specification
❶	Machine Vision Head	Select from RV1100/ RV500/RV300
❷	Communications Cable (PC - sensor)	Cable length: 16 m (optional: 36 m)
❸	Vision Cable (PC - sensor)	Cable length: 16 m (optional: 36 m)
❹	PC (optional)	Industrial PC
❺	Communications Cable (PC - YRC1000/YRC1000micro)	Cable length: 10 m
❻	Power Cable (thin)	Cable length: 5 m
	Power Cable (thick)	Cable length: 10 m
❼	Power Source Box and Cable	—

Machine Vision Head Specifications

Items		RV1100	RV500	RV300
Measurement	Measurement distance	1750 mm - 2350 mm	800 mm - 1000 mm	500 mm - 600 mm
	Measurement range	1160 mm × 1160 mm × 600 mm (H)	540 mm × 540 mm × 200 mm (H)	340 mm × 340 mm × 100 mm (H)
	Target minimum workpiece size Note: Necessary projection area	45 × 45 mm	20 × 20 mm	10 × 10 mm
Time	Measurement + recognition time	2.5 s	1.8 s	1.8 s
	Measurement cycle	5.0 s	3.0 s	3.0 s
Recognition	Recognition method	3D CAD matching		
	Repeatability	±0.5 mm	±0.15 mm	±0.1 mm
	Number of types to be registered	200 types		
Function (standard)	Empty pallet judgment function	Function to judge whether the pallet is empty or not		
	Pallet measurement function	Function to measure the position of thrown-in pallet		
	Interference check function	Function to detect interference between the hand and the workpiece or between the hand and the pallet		
	Calibration function	Function to perform the calibration of the robot and the machine vision head		
	Exposure time automatic adjustment function	Function that eliminates gloss of industry components/parts, and halation due to oil adhesion		
Main Unit	External dimensions (excluding protrusions)	252 (W) × 206 (D) × 124 (H) mm		
	Approx. Mass	6.4 kg		

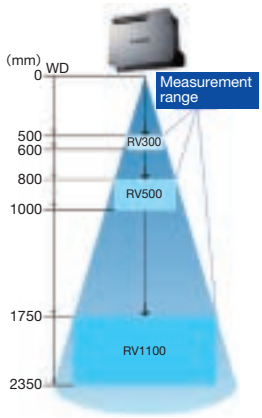

Measurement range example of each product

2D Vision Package

MotoSight2D

MotoSight2D is a vision package that enables the operation of vision systems using a programming pendant with YASKAWA's own software.

System Configuration

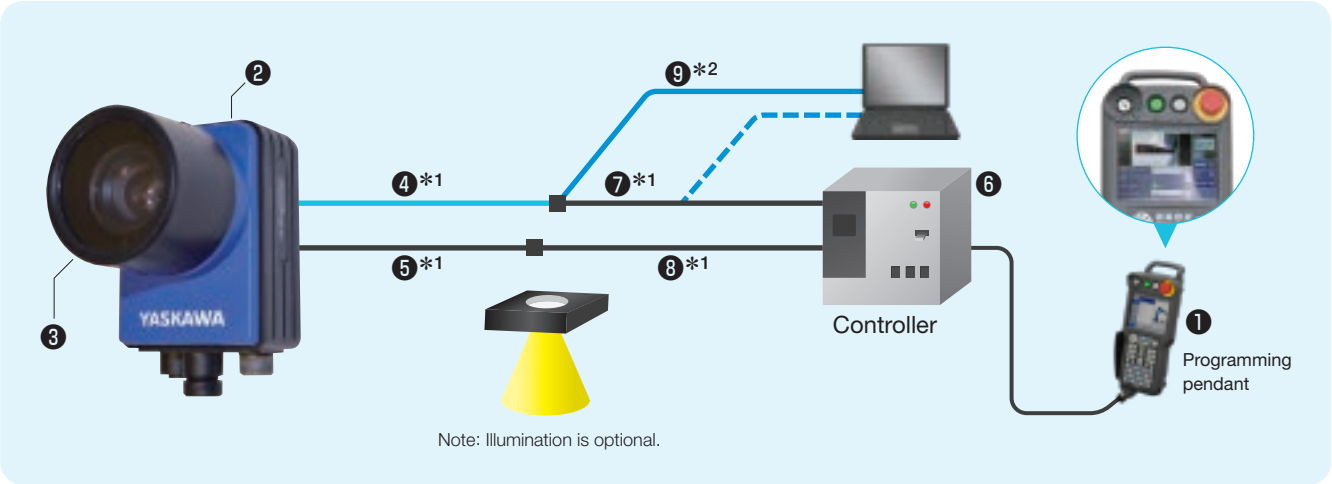

*1: Cables are all flexible/mobile cables. *2: Use by connecting to ❼ only when connecting to a PC.

Device Composition Table

NO.	Name	Specification
❶	MotoSight2D (PP application + MotoPlus + macro job)	Settings installed prior to shipping
❷	2D Vision Camera (built-in image processing device, with IP67 resin lens cover)	Select from Entry/Standard/High specification
❸	Lens	Focal distance: 9 mm/12.5 mm/16 mm/25 mm/50 mm
❹	Camera Communications Cable	Cable length: 5 m
❺	Camera Power Cable	Cable length: 5 m
❻	Customization of YRC1000 Controller for MotoSight2D	Connector panel attached, wiring (Ethernet) of power cable and communications cable
	External Box to YRC1000micro Controller for MotoSight2D	24 V power source built-in, wiring of power cable
❼	Camera Communications Extension Cable	Cable length: 5 m (standard)/15 m, 30 m (optional) (total cable length up to 35 m)
❽	Camera Power Extension Cable	Cable length: 5 m (standard)/15 m, 30 m (optional) (total cable length up to 35 m)
❾	Cable for PC Connection	Cable length: 0.5 m (connect to ❹ camera communications cable)

2D Vision Camera Line-up

Models		Applications	Resolution	CPU Speed ratio*3	Image processing functions
Entry Model MS100	Corresponds to In-Sight 7050-01	· Phase correction etc. (e.g., automobile parts)	800 × 600 pixel	× 1.0	COGNEX Limited tool set
Standard Model MS200	Corresponds to In-Sight 7200-11	· Correction of workpiece position (e.g., automobile parts, electrical parts etc.) · High speed processing combined with conveyor tracking etc. (e.g., high speed picking of foods etc.)	800 × 600 pixel	× 3.0	COGNEX Full tool set
High-spec Model MS300	Corresponds to In-Sight 7402-11	· Highly precise, wide field (e.g., automobile glass parts etc.)	1280 × 1024 pixel	× 6.0	COGNEX Full tool set

*3: The CPU speed rating is in comparison to the MS100.

Collaborative Robot HC10DT

Sales Department

HEAD OFFICE
2-1 Kurosaki-Shiroishi, Yahatanishi-ku, Kitakyushu, Fukuoka 806-0004, Japan
Phone: +81-93-645-7703 Fax: +81-93-645-7802

YASKAWA America, Inc. (Motoman Robotics Division)
100 Automation Way, Miamisburg, OH 45342, U.S.A.
Phone: +1-937-847-6200 Fax: +1-937-847-6277

YASKAWA Europe GmbH (Robotics Division)
Yaskawastrasse 1, 85391, Allershausen, Germany
Phone: +49-8166-90-100 Fax: +49-8166-90-103

YASKAWA Nordic AB
Verkstadsgatan 2, Box 504 ,SE-385 25 Torsas, Sweden
Phone: +46-480-417-800 Fax: +46-486-414-10

YASKAWA Electric (China) Co., Ltd.
22F, One Corporate Avenue, No.222 Hubin Road, Huangpu District, Shanghai 200021, China
Phone: +86-21-5385-2200 Fax: +86-21-5385-3299

YASKAWA SHOUGANG ROBOT CO., LTD.
No.7 Yongchang North Road, Beijing E&T Development Area China 100176
Phone: +86-10-6788-2858 Fax: +86-10-6788-2878

YASKAWA India Private Ltd. (Robotics Division)
#426, Udyog Vihar Phase-Ⅳ, Gurgaon, Haryana, India
Phone: +91-124-475-8500 Fax: +91-124-475-8542

YASKAWA Electric Korea Corporation
35F, Three IFC, 10 Gukjegeumyung-ro, Yeongdeungpo-gu, Seoul, Korea 07326
Phone: +82-2-784-7844 Fax: +82-2-784-8495

YASKAWA Electric Taiwan Corporation
12F, No.207, Sec. 3, Beishin Rd., Shindian District, New Taipei City 23143, Taiwan
Phone: +886-2-8913-1333 Fax: +886-2-8913-1513

YASKAWA Electric (Singapore) PTE Ltd
151 Lorong Chuan, #04-02A New Tech Park, Singapore 556741
Phone: +65-6282-3003 Fax: +65-6289-3003

YASKAWA Electric (Thailand) Co., Ltd.
59, 1st-5th Floor, Flourish Building, Soi Ratchadapisek 18,
Ratchadapisek Road, Huaykwang, Bangkok 10310, Thailand
Phone: +66-2-017-0099 Fax: +66-2-017-0199

PT. YASKAWA Electric Indonesia
Secure Building-Gedung B Lantai Dasar & Lantai 1 Jl. Raya Protokol Halim Perdanakusuma,
Jakarta 13610, Indonesia
Phone: +62-21-2982-6470 Fax: +62-21-2982-6471

YASKAWA

YASKAWA ELECTRIC CORPORATION

In the event that the end user of this product is to be the military and said product is to be employed in any weapons systems or the manufacture thereof, the export will fall under the relevant regulations as stipulated in the Foreign Exchange and Foreign Trade Regulations. Therefore, be sure to follow all procedures and submit all relevant documentation according to any and all rules, regulations and laws that may apply.

Specifications are subject to change without notice for ongoing product modifications and improvements.

LITERATURE NO. CHEP C941111 02C <3>-0

Published in Japan March 2018
16-8-43